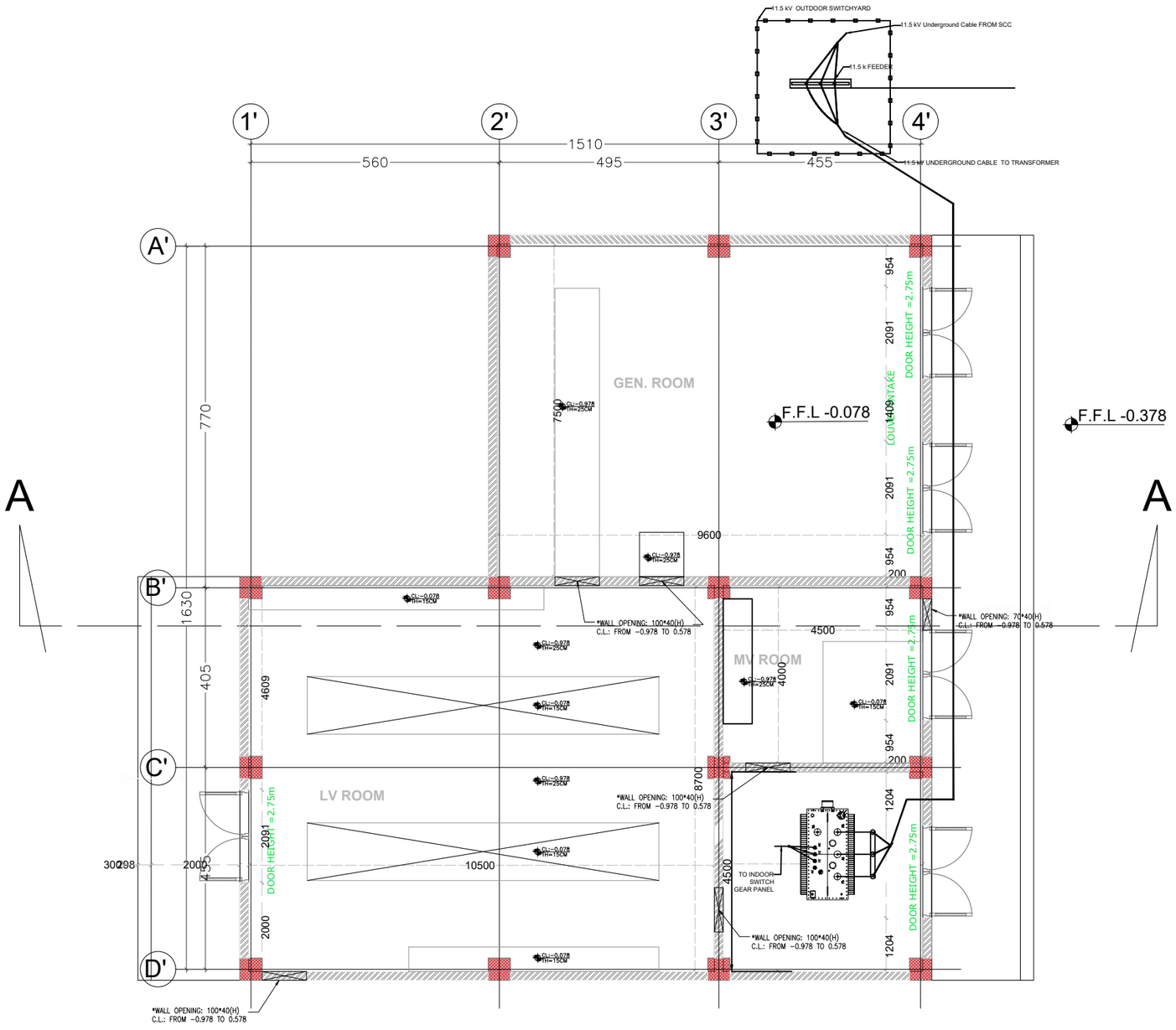

11.5 kV OUTDOOR SWITCHYARD
11.5 kV Underground Cable FROM SCC
11.5 k FEEDER
11.5 kV UNDERGROUND CABLE TO TRANSFORMER
1'
2'
3'
4'
1510
560
495
455
A'
B'
C'
D'
A
A
770
1630
405
GEN. ROOM
MV ROOM
LV ROOM
F.F.L -0.078
F.F.L -0.378
DOOR HEIGHT =2.75m
LOUVER INTAKE
954
2091
1409
9600
200
4500
4000
4609
8700
1204
10500
2000
*WALL OPENING: 100*40(H)
C.L.: FROM -0.978 TO 0.578
*WALL OPENING: 70*40(H)
C.L.: FROM -0.978 TO 0.578
TO INDOOR SWITCH GEAR PANEL

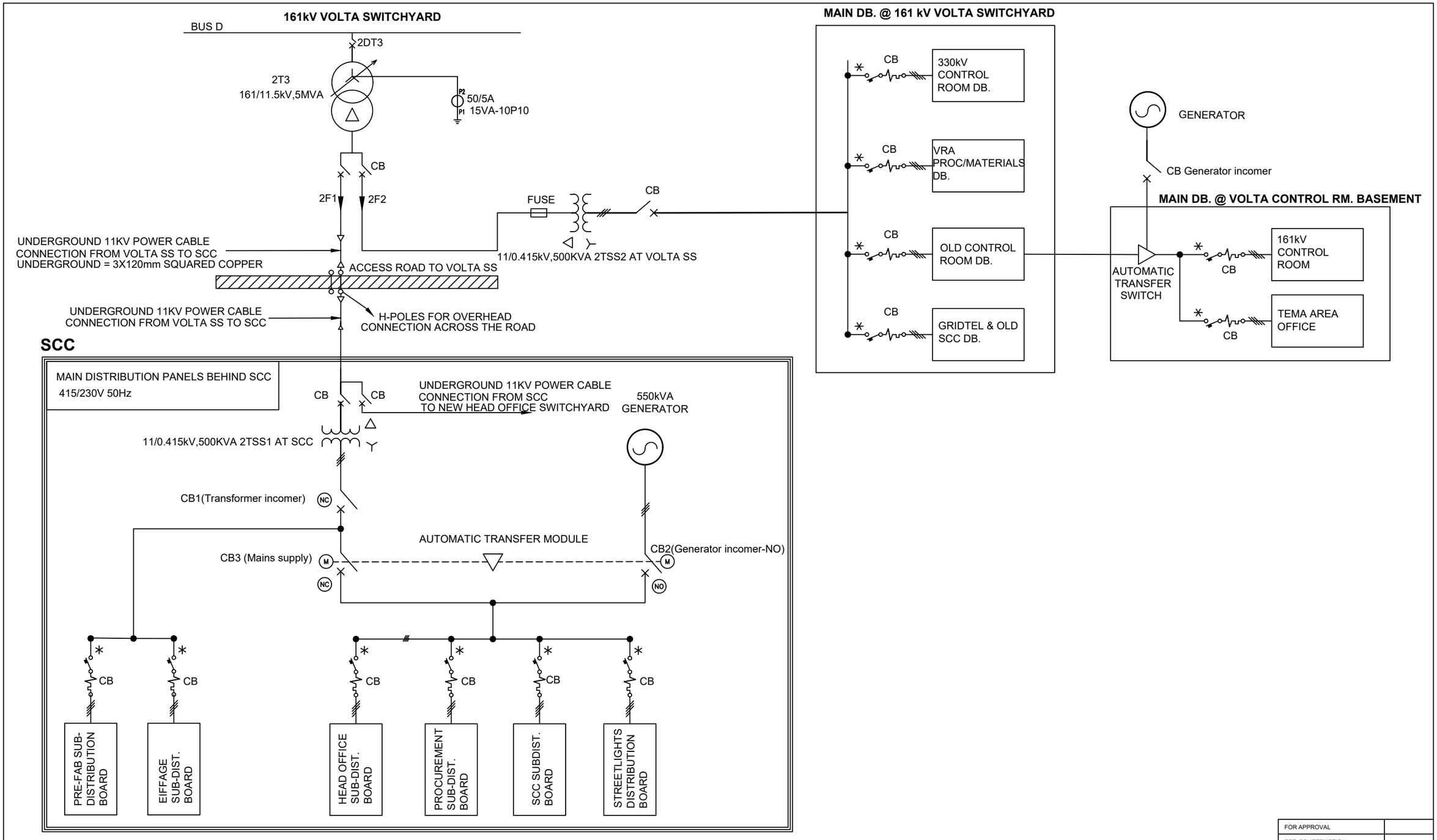

REVISION			
NO	BY	DATE	DESCRIPTION

APPROVED BY

THIS DRAWING IS THE PROPERTY OF GHANA GRID COMPANY LTD. AND IS NOT TO BE COPIED OR USED WITHOUT ITS WRITTEN PERMISSION

	MAY, 2023
SCALE	NOT DRAWN TO SCALE
DRAWN BY	
DESIGNED BY	IDDRISU AKUMBANGE
CHECKED BY	Martin Azane Kudjo

PROJECT: POWER SUPPLY TO NEW HEAD OFFICE

TITLE: EXISTING SCHEMATICS

Ghana Grid Company Ltd
P.O Box CS 7979, Tema,Ghana
Tel:0303 304818 /0303 310310
Fax :0303 676180 /0303 303327
Email: gridco@gridcogh.com,web:www.gridco.com

FOR APPROVAL	
FOR CONSTRUCTION	
FOR TENDERING	✓

GRIDCo
Backbone to Power Delivery

sheet size	Drawing no	sheet	Rev
A2			XX

NOTES :

WIRE COLOUR CODE:

RED, YELLOW, BLUE – AC PHASE CONNECTIONS
BLACK – AC NEUTRAL CONNECTIONS
GREEN – GROUND CONNECTIONS
GREY – DC CIRCUITS

ALL MCBs WILL HAVE OPENING AND TRIP ANNOUNCERS.

	EQUIPMENT
	MOTORIZED CIRCUIT BREAKER WITH OPENING AND TRIP ANNOUNCER
	CIRCUIT BREAKER
	CURRENT TRANSFORMER
	RECTIFIER / CHARGER
	EMERGENCY DIESEL GENERATOR

DEV.NO.	RELAY
A	METERING CURRENT
V	METERING VOLTAGE
Wh-Varh	POWER METERING
27	UNDERVOLTAGE SUPERVISION RELAY

Underground Cable to SCC

500 kVA Power Transformer
11.5/0.415 / 0. 250 kV c.a.

98-M1 2 A

27-M1

EMERGENCY DIESEL GENERATOR
EMERGENCY DIESEL GENERATOR
250 kW (312.5kVA)
52-G 52-G
250 kW (312.5kVA)

SOLAR PV SYSTEM SOLAR PV SYSTEM

M1 M1
V
Wh VArh
A
Wh
VArh

3 CT 800/5A cl. 1 7.5VA
3 CT 800/5A cl. 1 7,5VA

4-EG 630 A 4-EG 630 A

52-SA1 52 - SA1 630 A 630 A

52-SA5 52-SA5 63 A 63A

V-NE 27-NE
27-NE

98-MBN 98-MBN 2 A 2A

3 Ø + N - 415/240 V - 50Hz - 630A 15 kA NON ESSENTIAL SERVICES

4-EP 630 A 4-EP 630 A

3 CT 400/5A cl. 1 7.5VA
3 CT 400/5A cl. 1 7,5VA
A

V-E 27-E
27-E

98-MBE 2 A 98-MBE 2A

3 Ø + n - 415/240 V - 50Hz - 630A 15 kA NON ESSENTIAL SERVICES
3 ø + N – 415/240 V – 50 Hz – 630 A 15 kA ESSENTIAL SERVICES

52N - 1 100 A
52N - 2 20 A
52N - 3 20 A
52N - 4 20 A
52N - 5 20 A
52N - 6 20 A
52N - 7 20 A
52N - 8 50 A
52N - 9 50 A
52N - 10
52N - 11
52N - 12
52N - 13
52N - 17
52N-18 20 A
52N - 18
20 A

LOAD LOAD LOAD LOAD LOAD LOAD

52E-1 80 A 52E-1 80 A
52E-2 80 A 52E-2 80 A
52E-3 25 A 52E-3 25 A
52E-4 25 A 52E-4 25 A
52E-5 20 A 52E-5 20 A
52E-6 20 A 52E-6 20 A
52E-7 20 A 52E-7 20 A
52E-8 20 A 52E-8 20 A
52E-9 20 A 52E-9 20 A
52E-10 20 A 52E-10 20 A
52E-11 20 A 52E-11 20 A
52E-12 20 A 52E-12 20 A
52E-13 20 A 52E-13 20 A
52E-14 20 A 52E-14 20 A
52E-15 20 A 52E-15 20 A
52E-16 20 A 52E-16 20 A
52-17 20 A 52-17 20 A
52-18 50 A 52-18 50 A
52-19 50 A 52-19 50 A
52-20 20 A 52-20 20 A
52-21 50 A 52-21 50 A
52-22 20 A 52-22 20 A

UPS 10 kVA 30 Min. UPS 10 kVA 30 Min.

SAFE BUILDING DISTRIBUTION PANEL
SAFE BUILDING DISTRIBUTION PANEL
52-G 50 A 52-G 50 A
52-1 16 A 52-1 16 A — CIRCUIT 1
52-2 16 A 52-2 16 A — CIRCUIT 2
52-3 16 A 52-3 16 A — CIRCUIT 3
52-4 16 A 52-4 16 A — CIRCUIT 4
52-5 16 A 52-5 16 A — SPARE
52-6 16 A 52-6 16 A — SPARE
52-7 16 A 52-7 16 A — SPARE

AIR CONDITION PANEL
AIR CONDITIONING PANEL
52-G 100 A 52-G 100 A
52-1 16 A 52-1 16 A — CIRCUIT 1
52-2 16 A 52-2 16 A — CIRCUIT 2
52-3 16 A 52-3 16 A — CIRCUIT 3
52-4 16 A 52-4 16 A — CIRCUIT 4
52-5 16 A 52-5 16 A — SPARE
52-6 16 A 52-6 16 A — SPARE

POWER OUTLETS PANEL
POWER OUTLET PANEL
52-G 50 A 52-G 50 A
52-1 16 A 52-1 16 A — CIRCUIT 1
52-2 16 A 52-2 10 A — CIRCUIT 2
52-3 10 A 52-3 10 A — CIRCUIT 3
52-4 10 A 52-4 10 A — CIRCUIT 4
52-5 16 A 52-5 16 A — SPARE
52-6 16 A 52-6 16 A — SPARE
52-7 10 A 52-7 10 A — SPARE
52-8 10 A 52-8 10 A — SPARE
30 mA 30 mA

OUTSIDE LIGHTING PANEL
OUTSIDE LIGHTING PANEL
52-G 50 A 52-G 50 A
52-1 25 A 52-1 25 A — CIRCUIT 1
52-2 25 A 52-2 25 A — CIRCUIT 2
52-3 25 A 52-3 25 A — CIRCUIT 3
52-4 25 A 52-4 25 A — CIRCUIT 4
52-5 25 A 52-5 25 A — SPARE
52-6 25 A 52-6 25 A — SPARE

LIGHTING BUILDING PANEL
LIGHTING BUILDING PANEL
52-G 50 A 52-G 50 A
52-1 16 A 52-1 16 A — CIRCUIT 1
52-2 16 A 52-2 16 A — CIRCUIT 2
52-3 10 A 52-3 10 A — CIRCUIT 3
52-4 10 A 52-4 10 A — CIRCUIT 4
52-5 16 A 52-5 16 A — SPARE
52-6 16 A 52-6 16 A — SPARE
52-7 10 A 52-7 10 A — SPARE
52-8 10 A 52-8 10 A — SPARE